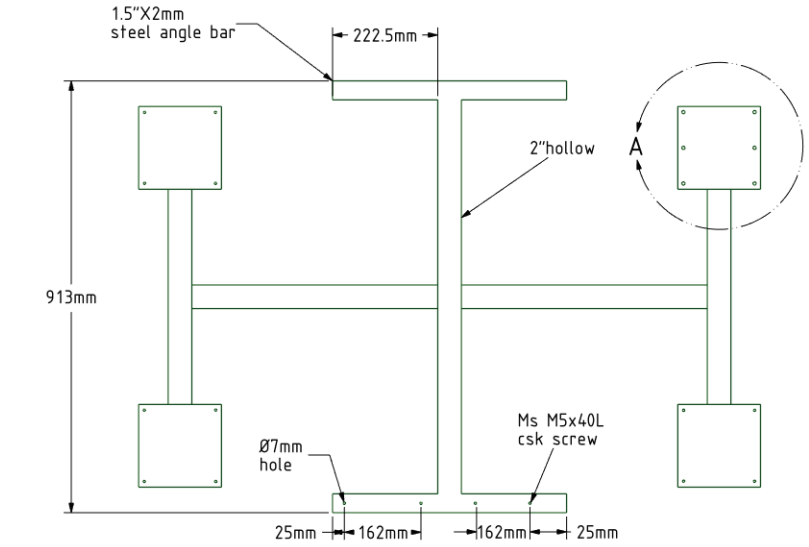

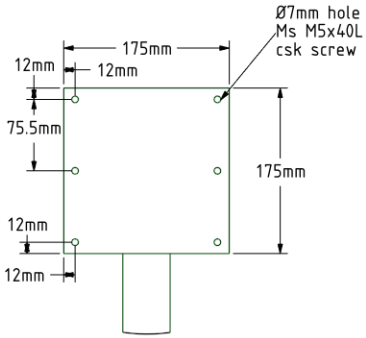

DETAIL A
175x175x5mm

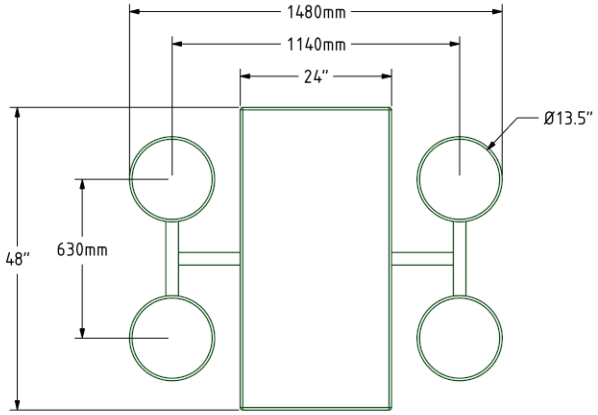

Remark:
48"x24"x30mm Table
Ø13.5"x30mm Stool

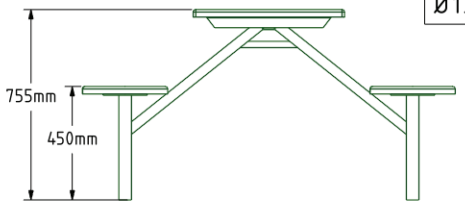

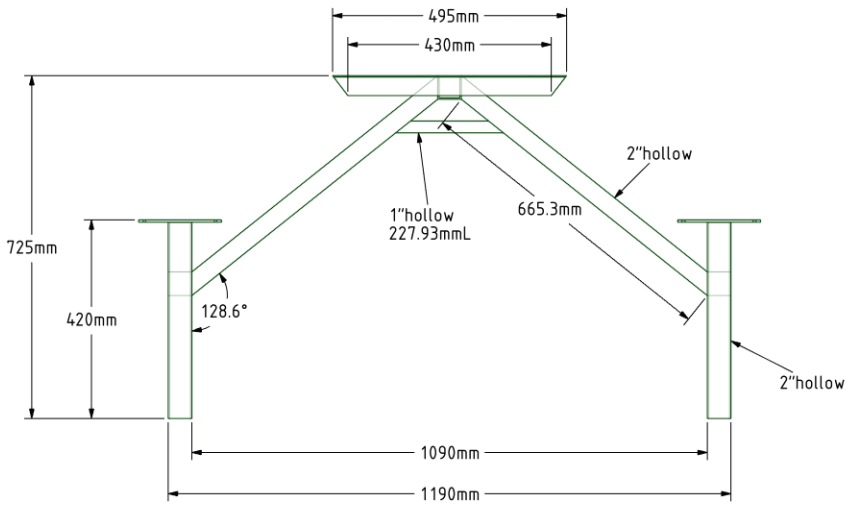

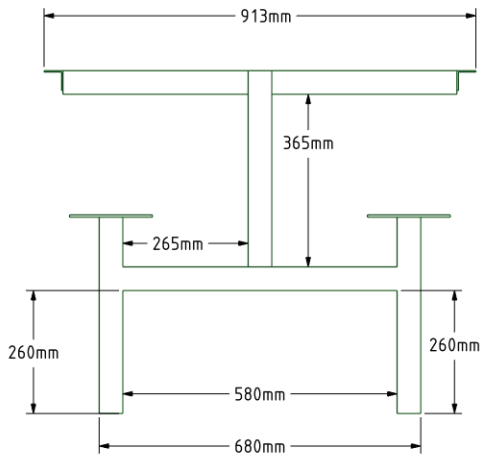

REMARK:	
Overall Size:	
MATERIAL :	
SO NO:	
REF NO:	
QTY:	
COLOR :	
± (mm) :	
REMARK:	

REV	DATE	DESCRIPTION

JONCAN™
GRP SPECIALIST

JONCAN COMPOSITE SDN BHD
No. 26, Jalan Selatan 3/3,
Taman Perindustrian Ringan Pulai,
81300 Skudai, Johor, Malaysia
Sales Inquiry: +6012- 713 0306
General Inquiry: +6012- 699 0306

DWG NO: B1-4seater-rev1			
DATE : 31/7/2023		SHT: 1/1	REV: 0
APPOVED BY: (ASSIGNED)	SIZE: A2		